# MARVEL2

# KVW-UV HOOD

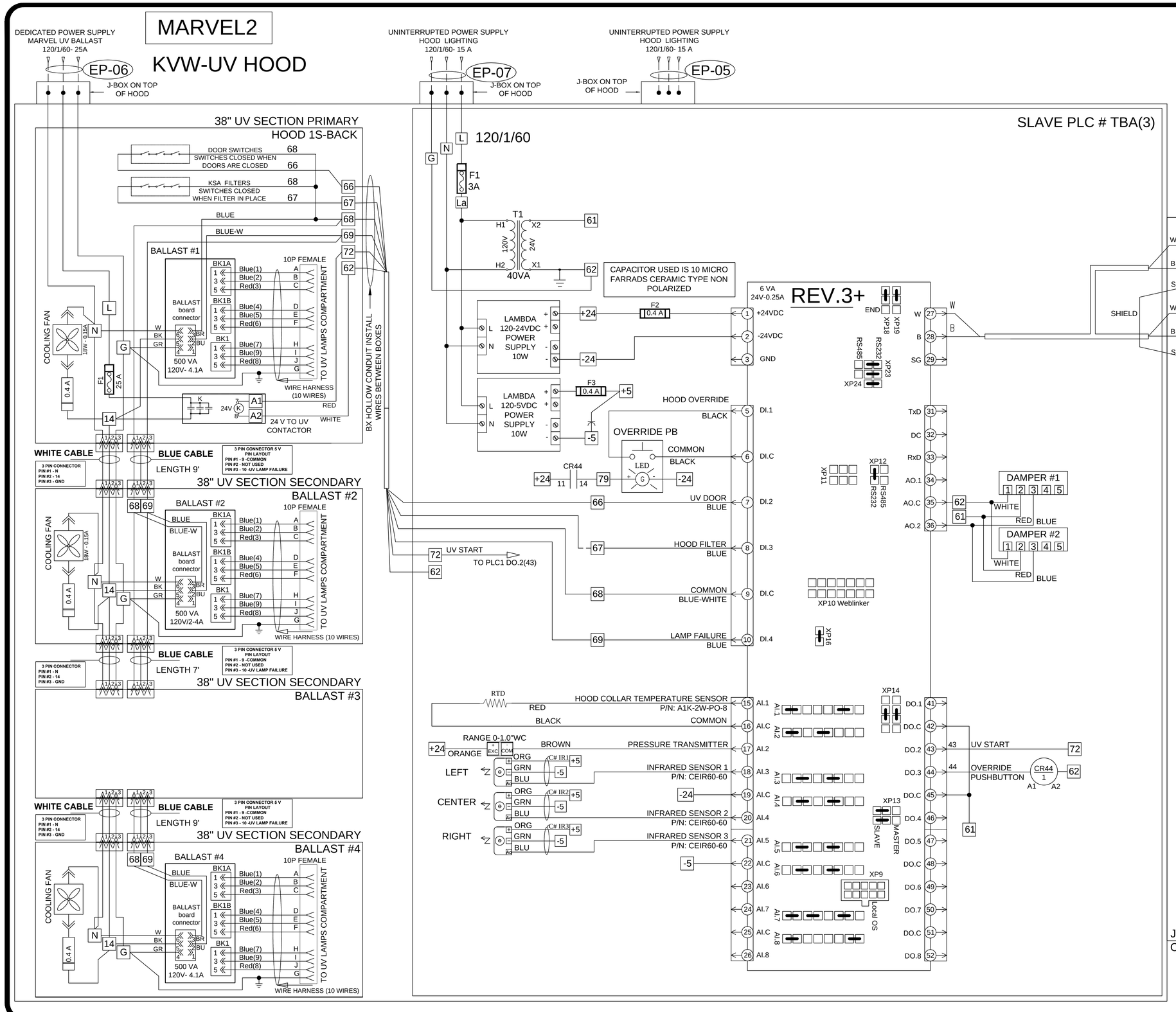


CFM = 3125
COEF = 4623
T.A.B. = 0.425

# HOOD S1-FRONT

**ELECTRICAL CONNECTION SCHEDULE**

| | |
|---|---|
| | POWER CONNECTIONS |
| EP - 05 | 120VAC 15A POWER WIRING LIGHTING |
| EP - 06 | 120VAC 15A POWER WIRING UV |
| EP - 07 | 120VAC 15A POWER WIRING PLC |
| | |
| | |
| | CONTROLS CONNECTIONS |
| EC - 05 | 2 WIRES STP CABLE-PLENUM RATED |
| EC - 06 | 2 WIRES STP CABLE-PLENUM RATED |

THIS DRAWING MUST BE CHECKED, SIGNED AND RETURNED TO THE APPROPRIATE FACTORY. PLEASE VERIFY THE FOLLOWING:
1. ALL DIMENSIONAL INFORMATION, MOUNTING POSITIONS AND CLEARANCES.
2. THE LOCATION AND TYPE OF COOKING EQUIPMENT.

NOTE TO APPROVER
ANY CHANGES IN COOKING EQUIPMENT SUCH AS INCREASED ENERGY INPUTS OR EQUIPMENT POSITIONING MAY AFFECT THE AIRFLOW RATIO WHICH MUST BE VERIFIED IF ANY OF THESE CHANGES OCCUR, A RECALCULATION EXHAUST AIRFLOW MAY BE REQUIRED.

☐ REVISE AND RESUBMIT
☐ WITH NO CHANGES
☐ WITH CHANGES AS NOTED

APPROVED FOR FABRICATION
APPROVED BY
DATE

MAIL APPROVED DRAWINGS TO APPROPRIATE FACTORY BELOW: WEBSITE: WWW.HALTONCOMPANY.COM

HALTON CO. (USA)
101 INDUSTRIAL DRIVE
SCOTTSVILLE, KY 42164
1-270-237-5600

HALTON CO. (CANADA)
1021 BREVIK PLACE
MISSISSAUGA, ON L4W 3R7
1-905-624-0301

| REV. | REVISION DESCRIPTION | BY | DATE |
|---|---|---|---|
| 8 | ADDED WIRING DIAGRAM | AK | 03.14.17 |
| 9 | | | |
| 10 | | | |
| 4 | | | |
| 5 | | | |
| 6 | | | |
| 7 | | | |

PROJECT: PACIFIC CENTRE - EDO JAPAN
LOCATION: VANCOUVER, BC
DRAWN BY: AK
DATE: 03.14.17
SCALE: NOT TO SCALE
CONSULTANT:

Halton

DRAWING TITLE: HOOD DETAILS
DRAWING No.: C16-441
REV. NO.: 1
SHEET NO.: 4B of 4