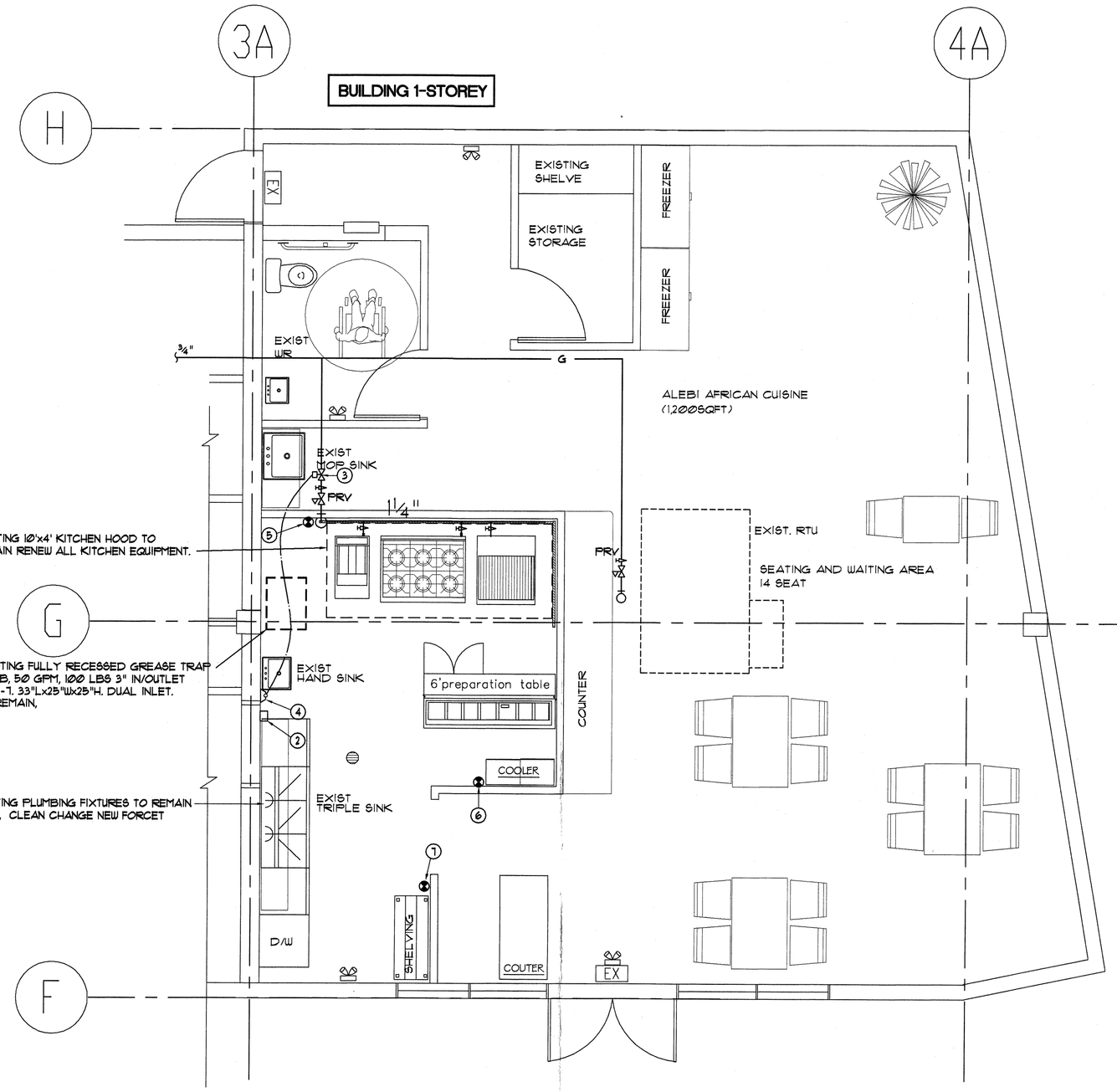

EXISTING PLAN- PLUMBING

SCALE: 1/4"=1'-0"(1,200 SQFT)

NOTES:

2. SF-1 CONTROL PANEL(ON/OFF SWITCH) WITH FLOW SWITCH INTERLOCK WITH KITCHEN EXHAUST FAN.
3. INSTALL GAS SHUT-OFF VALVE SUPPLIED BY KITCHEN SUPPLIER FOR INTERLOCKING WITH FIRE SUPPRESSION SYSTEM.
4. FIRE SUPPRESSION SYSTEM.
5. WET CHEMICAL BY KITCHEN EQUIPMENT SUPPLIER.
6. KITCHEN FIRE EXTINGUISHER TYPE "K"
7. 5Lbs ABC FIRE EXTINGUISHER, SEMI RECESSED CABINET (TYP. OF 2)

NOZZLE SUMMARY	TYPE	NUMBER	FLOW NUMBER
18"x16" DUCT	ADP/1	2	2
10' x4' HOOD	ADP/1	2	2
DEEP FRYER	F/2	1	1
6 BURNER STOVE TOP	R/1	1	2
GRILL	GRW	1	1
		TOTAL	8

KITCHEN HOOD FIRE SUSPRESSION SYSTEM SPECIFICATIONS:

GENERAL.

Provide a complete and fully operational Kitchen Suppression system with facilities and service to meet N.F.P.A. 96, N.F.P.A. 17A and UL300 Requirement, and CITY OF SURREY Building by-law.

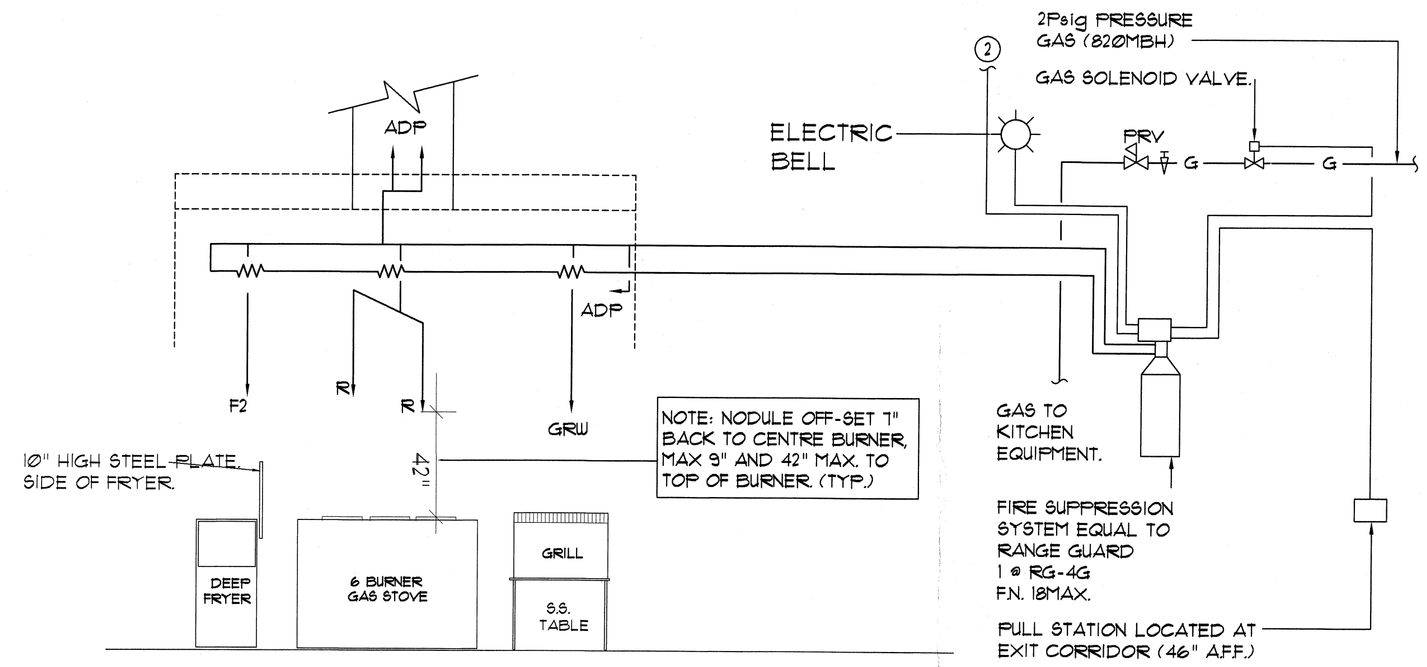

KITCHEN FIRE SUPPRESSION SYSTEM DETAIL

NOTES:

1. SF-1 INTERLOCK WITH KITCKEN EXHAUST FAN ON ROOF.
2. UPON ACTUATION OF THE FIRE SUPPRESSION SYSTEM, GAS SHALL SHUT-OFF, SIGNAL SEND TO FIRE ALARM SYSTEM, AND KITCHEN EXHAUST FAN SHALL CONTINUE TO RUN. CONFIRM TO CITY OF SURREY BUILDING BY LAW

SEQUENCE OF OPERATION

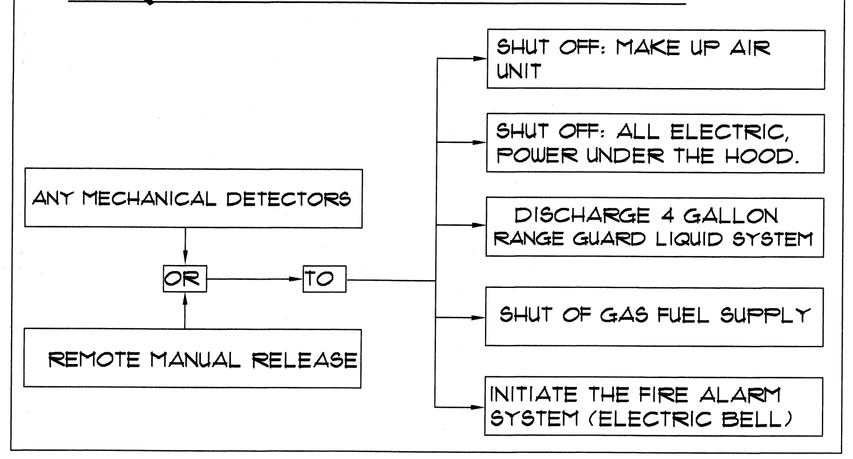

PROCESSED
MAR 13 2015
City of Surrey

RECEIVED
FEB 25 2015

REVISIONS

FEB 24 2015

CONSULTANT
CLOVER CONTRACTING LTD
CONTRACTORS AND ENGINEERS
CONTACT: B. J. YOES
SURREY, B.C. V3S 3W2
EMAIL: com.clovercontracting@gmail.com
PHS: 778 598 2432
FAX: 778 578 0781

NO.	DATE	DESCRIPTION	CH.
1	JAN. 23/2015	ISSUED FOR HEALTH AUTHORITY APPROVAL AND B.P.	CN
2	FEB. 24/2015	REISSUED FOR B.P.	CN

PROJECT: TENANT IMPROVEMENT
ALEBI AFRICAN CUISINE
10694-135A STREET, SURREY, B.C.

CONTENTS: PLUMBING PLAN

JOB NO.	DRAWN	CHECKED	DATE
201503	DN	CN	JAN. 2015

DRAWING NO. M-2